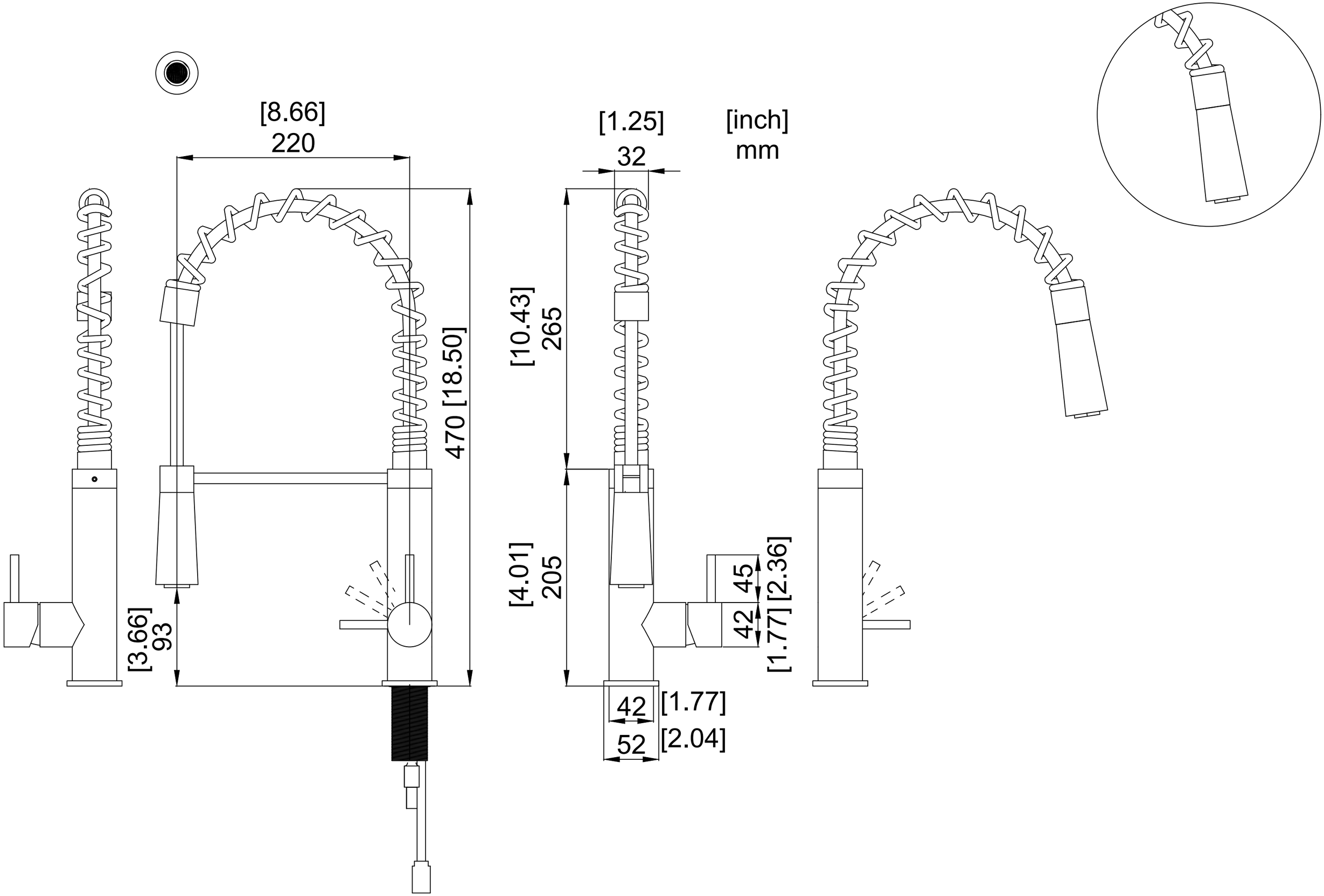
[8.66]
220
[1.25]
32
[inch]
mm
[10.43]
265
470 [18.50]
[4.01]
205
45
42
[2.36]
[1.77]
[3.66]
93
42
[1.77]
52
[2.04]