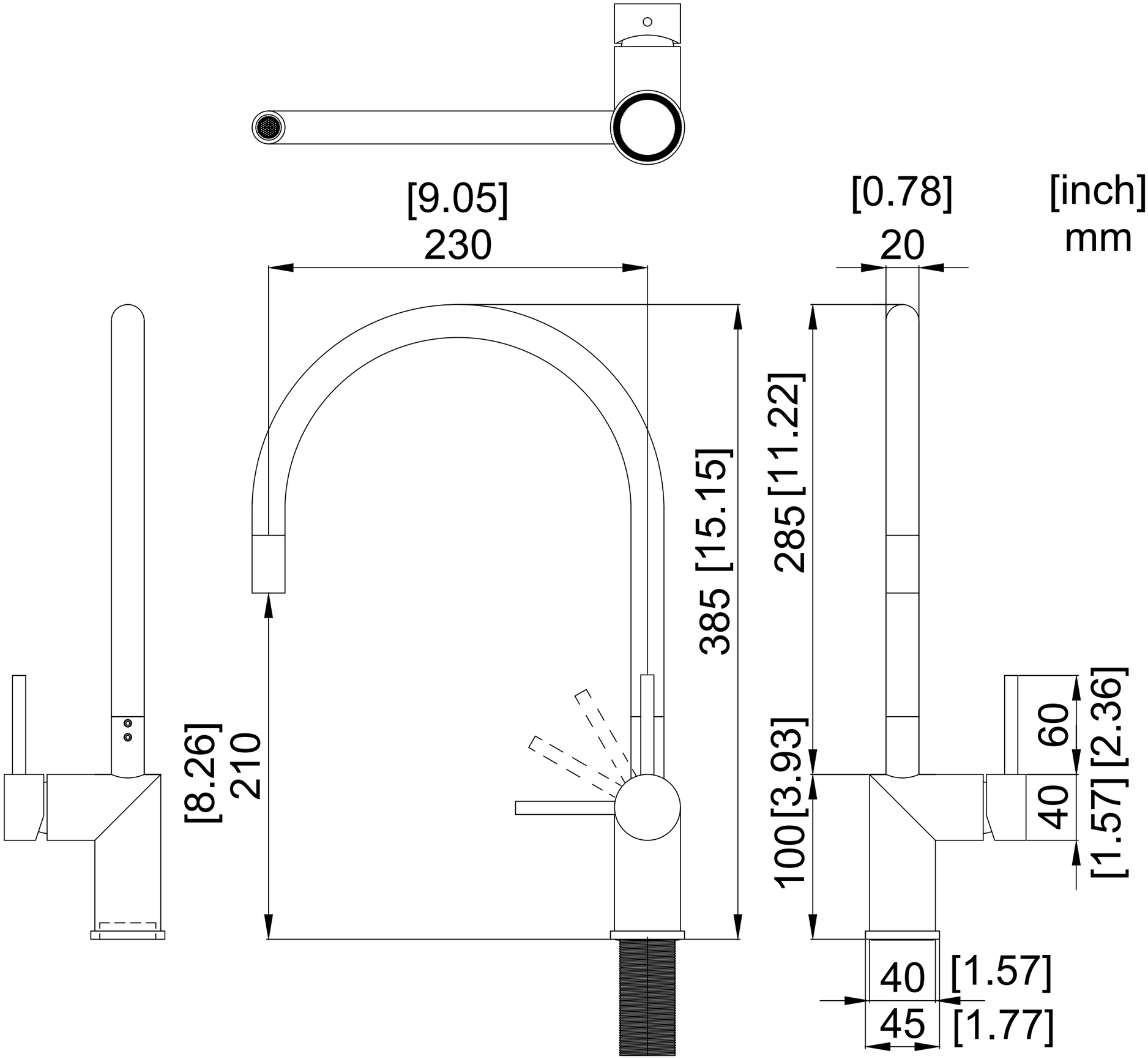
[9.05]
230
[0.78]
20
[inch]
mm
385 [15.15]
285 [11.22]
[8.26]
210
100 [3.93]
60
[2.36]
40
[1.57]
40 [1.57]
45 [1.77]